THANK YOU VERY MUCH FOR SELECTING OUR PRODUCT. THIS INSTRUCTION MANUAL DESCRIBES CORRECT OPERATING METHOD TO ENSURE PROLONGED SERVICE LIFE. PLEASE READ AND COMPLETELY UNDERSTAND THIS MANUAL BEFORE OPERATING THE LOW PROFILE LIFT TABLE. ALWAYS KEEP THIS MANUAL AT AN APPROPRIATE PLACE. IF THE MANUAL OR WARNING DECAL IS MISSING, PLEASE CONTACT WITH DEALER.

Note: This Manual has been prepared for skilled and competent personal. It provides instructions for using the product correctly and parts list. This Manual cannot replace the professional skills and expertise of the user.

1.



WARNING! *If operating the lift table improperly, a person may be seriously injured. Therefore, operate properly according to the following instruction*

◇ Read & thoroughly understand the Instruction Manual completely before using. Follow all safety instructions strictly.

◇ It is necessary to check all safety devices before operation.

◇ Make sure that there are no obstacles in the working area.

◇ Do not put foot or hand in scissors mechanism or through frame.

◇ Screw the lifting eyes on the base frame before working on the lift table.

◇ Do not overload the lift table. Load should be distributed on the table according to relevant load distribution chart.

◇ Pay attention if local voltage and frequency is as same as the input specification of the lift table.

◇ Use the lift table on flat and solid ground.

◇ All the electrical connection and disconnection operations must be carried out by skilled and competent personal.

◇ While operation, it is forbidden to contact the moving parts of the lift table.

◇ While the lift table moving, it is forbidden to adjust or to move the load.

◇ It is forbidden to lift the load, which perhaps does harm to a person or other object.

◇ It is forbidden to operate the lift table while a person is under the table.

◇ Do not adjust the safety valve of hydraulic power pack.

◇ It is forbidden to operate the lift table even if there is small structure distortion.

◇ Do not use in an explosive or flammable place.

2.



CAUTION! *If operating the lift table improperly, a person may be injured. Therefore, operate properly according to the following instruction.*

◇ The lift table is a movable lifter designed to lift or lower rated load. Do not use it for other purpose.

◇ Do not allow a person to operate the lift table, who does not understand its operation.

◇ It is forbidden to change the lift table without manufacturer's written admission.

◇ It is necessary to use the spare parts designated by manufacturer.

◇ Make sure to keep a distance between the table and ambient objects enough to operate the lift table safely.

◇ Keep the hydraulic system under clean and safe condition.

◇ The hydraulic power pack features an electric lowering control. The coils must be fed with the required voltage as described on those coils. The power supply voltage should not exceed ±10% of the rated required voltage.

◇ Always do maintenance and routine check while the lift table is unloaded.

◇ The lift table is not waterproof and should be used in a dry environment.

3. DAILY INSPECTION

Daily inspection is effective to find the malfunction or fault on the lift table. Before operation, check the lift table according to the following points.



CAUTION! *Do not use the lift table if any malfunction or fault is found.*

◇ Check all the terms of WARNING and CAUTION.
◇ Check scratches, bending or crack on the lift table.
◇ Check smooth movement of the table.
◇ Check if there is any hydraulic oil leakage.
◇ Check the vertical creep of the table.
◇ Check if all the bolts and nuts are firmly tightened.

4. Operating the lift table

■ LOADING

The maximum capacity of the lift table is 1000kg. Load should be distributed on the lift table equably.

■ Lifting the Table

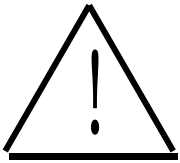

CAUTION! *Do not overload the lift table. Ensure the balance of loading. Do not load partially or concentrically.*

◇ Screw and loose emergency stop switch.

◇ Push the UP button and power pack starts to work to lift the load.

◇ Loose the UP button and power pack stops working.

■ LOWERING THE TABLE



WARNING! *Do not put foot or hand in scissors mechanism.*

◇ Push the DOWN button and the table will lower.

◇ Loose the DOWN button and the table will stop.

NOTE

◇ The table is equipped with an aluminum guard to avoid accidental danger.

◇ If aluminum guard strikes an object while the table lowers, stop operation and check the lift table. After making sure no any abnormality, strike the UP button slightly and then the electric system will function as before.

■ EMERGENCY STOP

There are two methods of emergency stop as follows.

◇ Push down the emergency stop switch and the movement of table stops.

◇ Strike aluminum guard upward and the movement of table also stops.

■ TRANSPORTATION

If necessary, the lift table can be transported with attached ringbolts.

◇ Pay attention to the maximum capacity of lifting equipment to be used.

◇ Keep the ringbolts with reasonableness.

5. SPECIFICATIONS

Model		HW1001	HW2001
Capacity (kg)		1000	2000
Collapsed Height (mm)		205	230
Max. Bearing Height (mm)		990	1000
Platform Length (mm)		1300	1300
Platform Width (mm)		820	850
Approx. Lifting Time while Loaded Rated Capacity （S）		15～20	15～20
Motor	Output (w)	750	1500
	Voltage (V)	400	
	Revolution (r/min)	1400	
	Protection Class	IP.54	
	Insulation Class	F.	
Net Weight (kg)		160	235

6. HYDRAULIC CIRCUIT & ELECTRIC PRINCIPLE DIAGRAM

See Figure 1 & Figure 2.

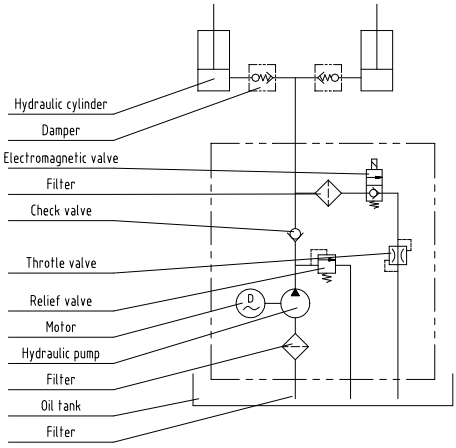

Fig. 1 Hydraulic circuit

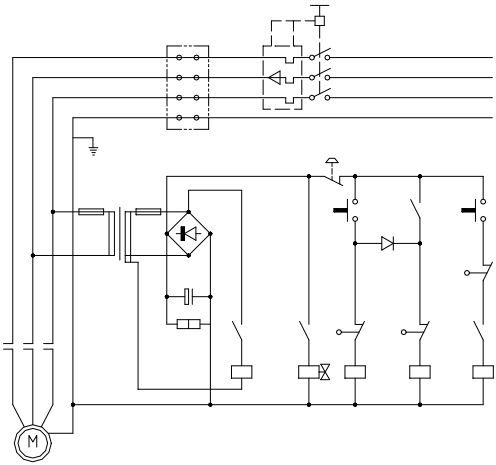

Fig. 2 Electric Principle Diagram

7. SERVICE INSTRUCTIONS

■ Do routine check of fasteners, packing and oil leaking.

■ Do routine check of the function of the lift table.

■ Before service the lift table, make sure to turn off the AC power supply.

■ After service it is necessary to check the function of the lift table again.

■ ONLY a qualified personnel can do service work.

■ Do routine check of the micro-switches on the safety guard.

■ Do routine check of the hydraulic system by listening its noise, touch motor's surface.

■ Caution: It is necessary to turn off the AC power supply before touch motor's surface.

■ Pay attention to clear or even replace the oil filter after operating for a long time.

■ Appropriate lubrication is necessary to make the lift table work easily and have a prolonged service life.

■ Following table is recommended to service the lift table periodically.

Content	After every 500 hours' working or every 3 months later	After every 2000 hours' working or every year
Check oil level of oil tank	☆	
Check the cleanliness of oil filter	☆	
Fasten all the connecting parts again	☆	
Check wear and tear of pressure oil pipes	☆	
Check hydraulic cylinder	☆	
Fix main parts tightly again	☆	
Check the function of micro-switches	☆	
Check whole working state of the lift table	☆	
Lubricate all the joints and pivot points	☆	
Check wear and tear of all axial bushes		☆
Replace hydraulic oil for the first time	Accumulated working ten hours'	
Replace hydraulic oil		☆
Check oil leaking		☆
Remark: ☆ *stands for proceeding the item.*		

8. Hydraulic diagrams and valves

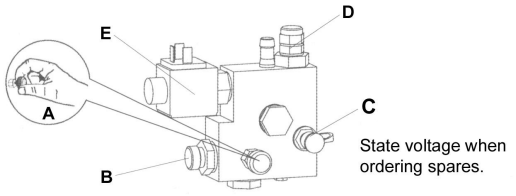

A = Flow control valve,adjustable
B = Connection for hydraulic hose
C = Pressure gauge connection point
D = Setting of maximum working pressure
E = Coll

9. TROUBLE SHOOTING

Note: Before service it is necessary to screw two eyebolts into relevant screw-holes on the basis lest the table lowers accidentally.

Trouble	Cause	Remedy
Table cannot lift while motor works normally	◇ Eyebolt has not been removed ◇ AC voltage phrases mistake ◇ Electromagnetic dysfunctions ◇ The table is overloaded	◇ Remove eyebolt ◇ Correct AC voltage phrase ◇ Check the function of electromagnetic valve and repair it ◇ Remove excessive load
Table cannot lift and motor does not work	◇ Lowering limit switch (if existed) damaged	◇ Replace limit switch
Table cannot lower	◇ Lowering limit switch or micro-switch on safety guard damaged ◇ Electromagnetic valve dysfunctions ◇ Safety guard works ◇ Something wrong with electric circuit board	◇ Replace lowering limit switch or micro-switch. ◇ Check the function of electromagnetic valve and repair it ◇ Strike the UP button slightly ◇ Replace electric circuit board
Table's legs go over limit position (if existed) while table lowers	◇ Internal leaking in electromagnetic valve ◇ Packing damaged in hydraulic cylinder	◇ Repair electromagnetic valve and if necessary replace it ◇ Check and replace packing
Table cannot reach the highest position	◇ Oil not enough ◇ Limit switch damaged	◇ Fill enough oil ◇ Check and repair limit switch. If necessary, replace it

常州市祥瑞液压设备有限公司
CHANGZHOU XIANGRUI HYDRAULIC EQUIPMENT CO.,LTD.